FUNCTIONAL DIAGRAM
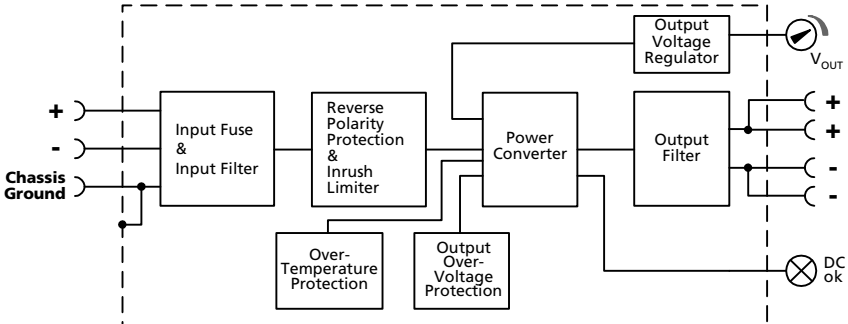
Fig. 8-1 **Functional diagram**